Project:_____ Item No._____ Quantity_____

STERO ER-44
RACK CONVEYOR SERIES



c UL us LISTED

NSF

ENERGY STAR

The **STERO ER-44** is ENERGY STAR® qualified and provides a recirculated, heated wash followed by a fresh water rinse creating a high volume, low water consuming washer in a 44" footprint.

The full rack width washing pattern with our 225 gallons per minute pump powers this dishwashing workhorse. Rinsing and sanitizing is controlled by STERO's exclusive rack activated final rinse which guarantees accurate, trouble-free cleaning.

Easy to operate, accessibility to components for maintenance and a basic design that produces clean dishes… that is the **STERO ER-44** conveyor.

STANDARD FEATURES

- 223 racks per hour
- Rinse 2.43 gpm /.65 gallons per rack
- 21" opening accepts most ware
- Automatic fill maintains proper tank levels
- Automatic start, rack activated switch starts conveyor and pumps
- Automatic shut down stops operation during idle periods
- 2 HP wash motor recirculating 225 gpm
- Single point drain connection
- Center-fed wash manifold
- Stainless steel front enclosure panel protects motors and controls from moisture
- Door interlock switches prevents operation if door is open
- Stainless steel drain valves and poppets, foot activated
- Kit 55, included prv, shock arrestor and pressure gauge in final rinse line
- Bell-type stainless steel skimmer acts as overflow and removes fats and oils from the wash tank

OPTIONS & ACCESSORIES

- ❍ Right to Left / Left to Right Operation
- ❍ Vent Cowls
- ❍ Stainless 15/30 KW Booster Heater
- ❍ Steam Booster
- ❍ Single Point Electric Connection
- ❍ Optional Cabinet-Style Doors (shown)
- ❍ Table Limit Switch
- ❍ Correctional Package
- ❍ Side Loader
- ❍ Voltage
  208V 220V 480V 60cy 3ph
- ❍ International options available, consult factory

STERO ER-44
RACK CONVEYOR SERIES

ER-44 WITHOUT BOOSTER		
VOLTAGE	**RATED AMPS**	**MAX PROTECTIVE DEVICE**
ELECTRIC TANK HEAT, TOTAL LOAD		
208/60/3	49.05	60
240/60/3	47.30	60
480/60/3	21.65	30
STEAM TANK HEAT, TOTAL LOAD		
208/60/3	7.05	15
240/60/3	6.80	15
480/60/3	3.65	15

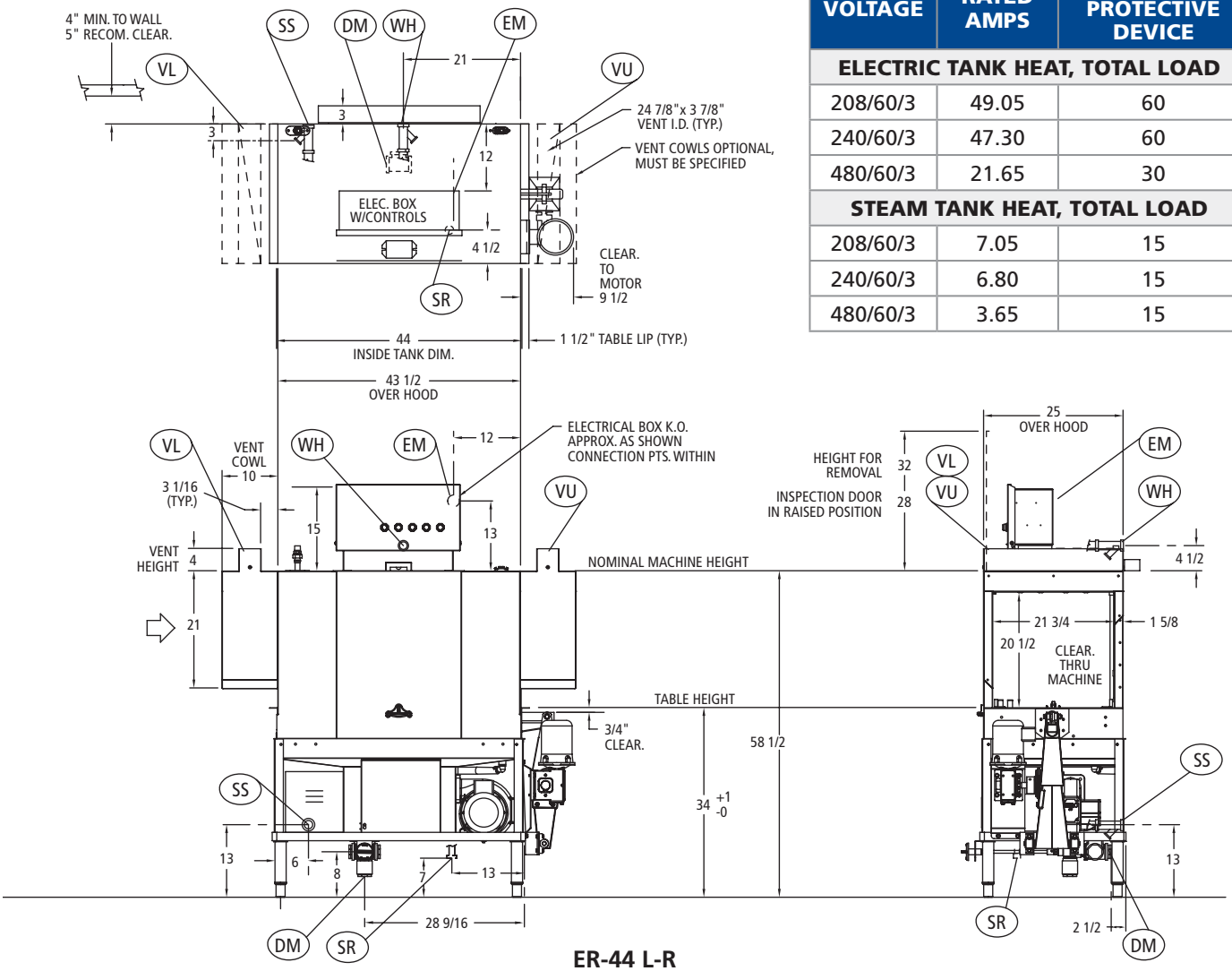

ER-44 L-R

ELECTRIC TANK HEAT		
PTS.	**SIZE**	**DESCRIPTION**
DM	2" NPT (F) DRAIN	MACHINE WASTE:
WH	3/4" NPT (F)	WATER SUPPLY: 110°F. MIN. @ 20 PSI FLOW PRES. CONSUMPTION = 146 GALS./HR.
EM	ELECTRICAL REQ.	ONE (1) FEEDER SIZED FOR: 1. WASH PUMP MOTOR .....2 HP 2. CONVEYOR MOTOR.....1/4 HP 3. WASH TANK HEAT.....15 KW
VL	NOTED	VENT, LOAD END: RECOM. MIN. DRAW = 200 CFM
VU	NOTED	VENT, UNLOAD END: RECOM. MIN. DRAW = 400 CFM

STEAM TANK HEAT		
PTS.	**SIZE**	**DESCRIPTION**
DM	2" NPT (F) DRAIN	MACHINE WASTE:
WH	3/4" NPT (F)	WATER SUPPLY: 120°F. MIN. @ 20 PSI FLOW PRES. CONSUMPTION = 146 GALS./HR.
SS	3/4" NPT (F)	STEAM SUPPLY: 15-40 PSI CONSUMPTION @ 20 PSI TANK HEAT: 100 LBS./HR.
SR	1/2" NPT (F)	STEAM RETURN:
EM	ELECTRICAL REQ.	ONE (1) FEEDER SIZED FOR: 1. WASH PUMP MOTOR .....2 HP 2. CONVEYOR MOTOR.....1/4 HP
VL	NOTED	VENT, LOAD END: RECOM. MIN. DRAW = 200 CFM
VU	NOTED	VENT, UNLOAD END: RECOM. MIN. DRAW = 400 CFM

STERO ER-44
RACK CONVEYOR SERIES

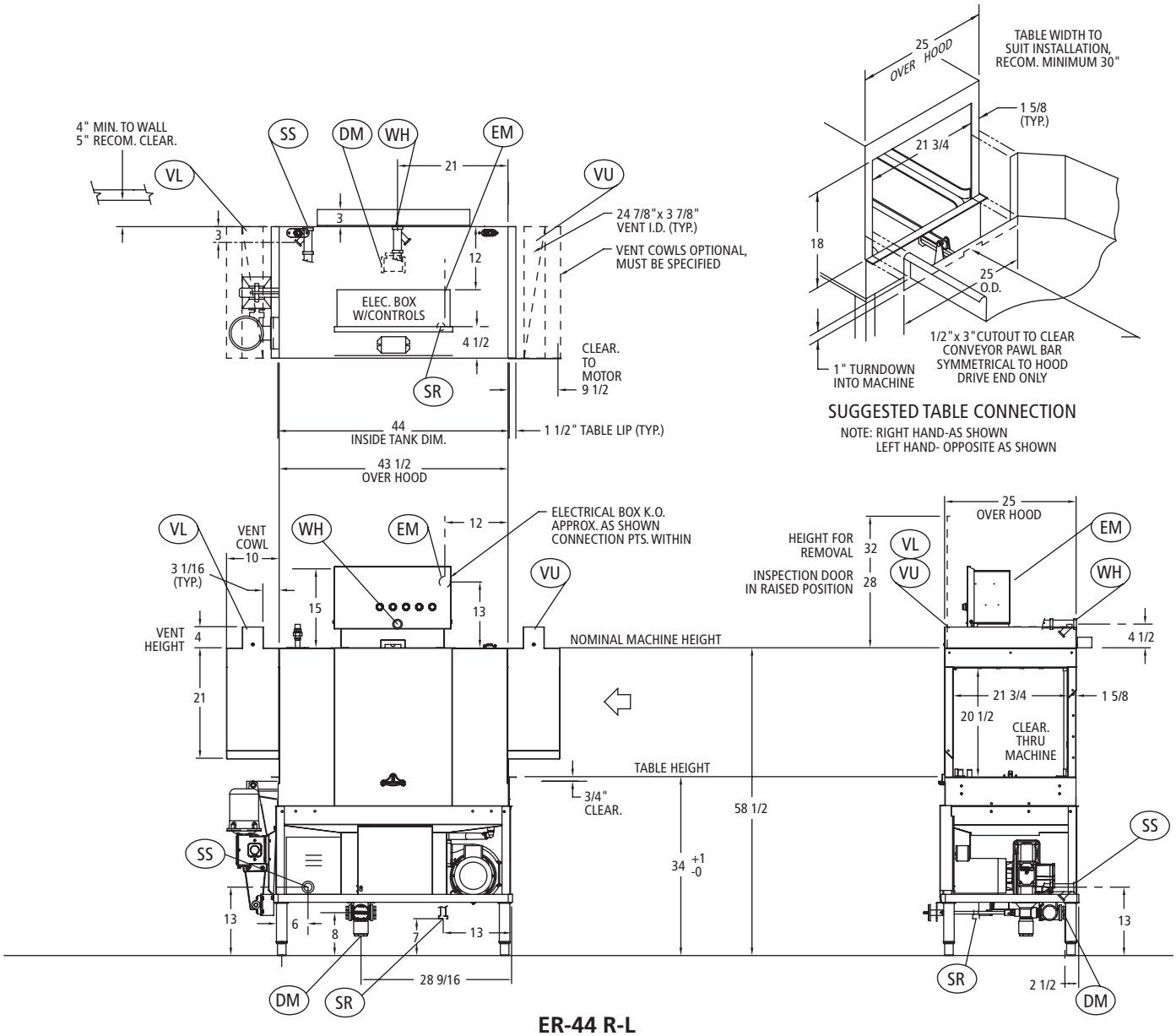

ER-44 R-L

ADDITIONAL CIRCUIT FOR OPTIONAL BOOSTER		
ELECTRIC BOOSTER HEAT 15 KW		
VOLTAGE	RATED AMPS	MAX PROTECTIVE DEVICE
208/60/3	45.0	60
240/60/3	40.1	50
480/60/3	20.0	25

ADDITIONAL CIRCUIT FOR OPTIONAL BOOSTER		
ELECTRIC BOOSTER HEAT 30 KW		
VOLTAGE	RATED AMPS	MAX PROTECTIVE DEVICE
208/60/3	84.0	90
240/60/3	80.1	90
480/60/3	40.0	50

STERO ER-44
RACK CONVEYOR SERIES

Design: Single tank 20" Rack Conveyor, 44" in length with a power wash and a sanitizing fresh water final rinse. Flexible strip curtains at each end prevent splash out. A large lift up inspection door allows easy access to interior of machine for cleaning and maintenance.

Construction: Tank and hood are formed from 300 series No. 4 mill finish stainless steel, fully welded with a minimum of bolt together construction. Frame is heavy-duty stainless steel flat stock construction conforming to National Sanitation Foundation (NSF) Standard No. 3. The machine is supported by enclosed stainless steel feet. All internal piping, fittings, risers and manifolds are stainless steel.

Power Wash: STERO's unique stainless steel manifolds are center-fed, fitted with stricture free jets with directional vanes and can be easily removed without tools. Center fed manifolds distribute an even flow of wash water over the entire perimeter of the rack, ensuring consistent results. The ER-44 distributes 225 GPM of detergent water pumped over the ware by a 2 HP motor and pump assembly.

Final Rinse: Stainless rinse arms mounted above and below are fitted with directional fanjets, which create a full coverage spray pattern for maximum rinsing and sanitation. The rack activates STERO's final rinse switch and hot water solenoid valve with stainless steel seat. A vacuum breaker mounted downstream from the solenoid and 6" above the upper rinse complete STERO's rinse system.

Conveyor: A center-drive stainless steel pawl bar with stainless steel pawls conveys the racks through the spray pattern and out onto the clean dish table. The conveyor is powered by an integral ¼ HP motor and speed reducing drive which has a built-in release to prevent damage to racks or machine in the event of a rack jam. The racks ride on 12 gauge stainless steel tracks.

Drain Valves: STERO designed poppet-type drain valve, stainless steel seats and casting assures leak proof and trouble free life. Externally controlled with spring-loaded shafts to prevent damage.

Common Drain: STERO connects overflow and drain valves so that one drain rough-in will service the entire machine.

Optional Built-in Stainless Steel Booster Heater: 30KW booster that is field convertible to 15KW is integrated into the STERO ER-44 saving on installation and floor space.

Kit 55: STERO mounts a ¾" pressure reducing valve, shock-arrestor and flow pressure gauge in the final rinse line prior to the rinse solenoid valve.

The shock-arrestor prevents line hammer and will double the life of the valve. The PRV will allow adjustment of the final rinse pressure and the gauge will give visual proof when it is correct.

Standard Electrical Features: All motors on STERO conveyor machines are factory wired in waterproof conduit and fittings to a common connection point. The motors are protected by thermal-overloads with manual reset buttons. The magnetic motor starters, start-stop switches, and electric tank heating element contactors (when specified) are mounted in a stainless steel control box for one point connection.

Door Safety Switch: Prevents the machine from operating if the door is open. The machine will automatically shut-off if the door is opened while the washer is running.

Thermometers: One each for wash and final rinse.

Pumps & Motors: 2 HP, 1750 rpm, 225 GPM, heavy duty with sealed bearings and overload protection. The pumps have easily removable inspection plates—front and end—and are self draining. Stainless steel perforated strainer pans cover the tank.

TANK HEATING OPTIONS

Electric: Stainless steel elements totaling 15 kW are mounted in the bottom of the wash tank. The unit is thermostatically controlled and has STERO's low water protection system. The elements, thermostat, LWP and contactor are all inter-wired to the control panel.

Steam Injectors: Two stainless steel injectors with silencers are mounted in the tank. A thermostat controls a special solenoid valve, and maintains the correct temperature.

Steam Coils: STERO designed and built stainless steel steam coils are mounted in the tank. Steam coils allow condensed steam to be returned to the steam generator, a decided advantage when there is a question of steam purity. A thermostat controls a special steam solenoid valve and maintains the correct temperature. A steam trap is mounted on the steam return line.

In line with its policy to continually improve its products, Stero reserves the right to change materials and specifications without notice.

STERO, a division of Illinois Tool Works, Inc. 1758 Corporate Circle Petaluma, CA 94954
Phone: 800-762-7600 ***Fax:*** 707-762-5036 ***Website:*** Stero.com

ST50415 (07/18)